Please perform the procedure outlined in this Service Information on all affected vehicles before customer delivery. In the event the customer has already taken delivery of the vehicle, please perform the procedure the next time the vehicle is in the shop.

This Service Information bulletin replaces SI B17 08 17 **dated November 2017**

What's New:

• Checking and repair procedure has been added

•Warranty Information has been added

• Parts information added

MODEL

G12 PHEV (7 Series)	G30 PHEV (5 Series)

AFFECTED VEHICLES

This Delivery Stop involves G12 PHEV and G30 PHEV vehicles produced from October 2, 2017 to October 24, 2017.

Vehicles which require this Delivery Stop to be completed will show it as "Open" when checked either in AIR, the "Service Menu" of DCSnet (Dealer Communication System) or with the Key Reader.

Approximately 439 vehicles are affected by this delivery stop.

SITUATION

The coolant return line coming out of the engine machine electronics (EME) may develop a coolant leak.

CAUSE

Deformation at the fitting of the coolant return line for the EME to the low temperature cooling circuit.

CORRECTION

Check and if necessary, replace the coolant return line for the EME.

PROCEDURE

Warning: Risk of scalding. Only carry out repair work on the cooling system after the engine has cooled down.

	The coolant return line is located along the right (passenger) side frame

Copyright ©2022 BMW of North America, Inc.

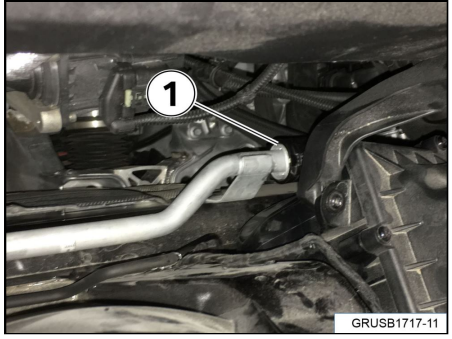	rail. The quick connector for the coolant line is located under the air box (1).
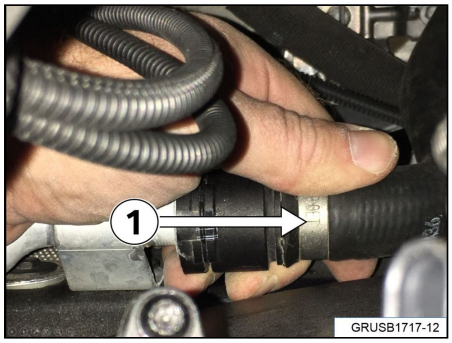	Pull the rubber coolant line with plastic quick connector away from the aluminum coolant line (1). If the line can be removed or is leaking coolant the aluminum return line will need to be replaced.
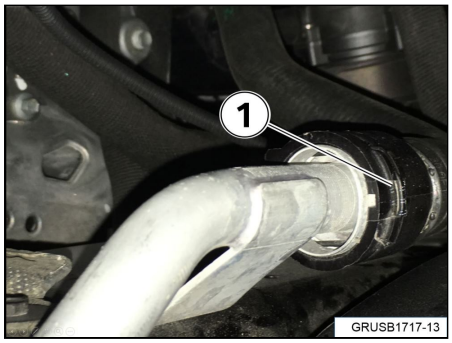	Check the locking tab on the quick connector (1). The locking tab needs to sit flush with the plastic housing. If the locking tab isn't flush the aluminum coolant return line will need to be replaced.
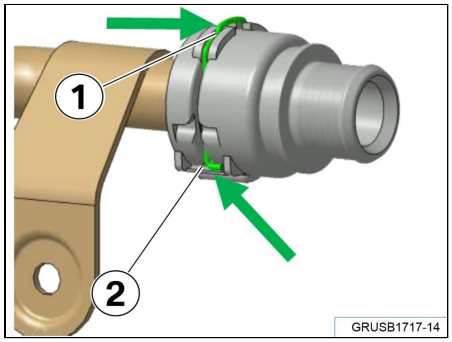	When the locking tab (1) sits flush, the hooks on the end of the locking tab sit firmly into the plastic connector (2). This locks the coolant hoses together.

If the coolant hose is locked securely there is no other repair necessary and the vehicle can be released.

If the hose with the quick connector can be easily removed, or the locking tab does sit flush, the hose will need to be replaced. This SIB will be updated with specific repair instructions when parts become available for repair.

UPDATE! Follow the attachment **B17 08 17 Replacing the Coolant Return Line** for the complete repair procedure

PARTS INFORMATION

Part Number	Description	Quantity
17 12 8 602 624	Coolant return pipe	1
17 12 8 642 529	O-ring	2

Copyright ©2022 BMW of North America, Inc.

82 14 1 467 704	ANTIFREEZE (One Gallon, Bulk)	See below

WARRANTY INFORMATION

Reimbursement for this Service Action will be via normal claim entry utilizing the following information:

Defect Code:	**0017800100**	
Labor Operation:	**Labor Allowance:**	**Description:**
00 65 870	3 FRU	Checking the coolant return line (No repair is needed) (Plus work)
Or:		
00 65 857	14 FRU (G30); 18 FRU (G12)	Check and replace the coolant return line (Plus work)

And:

Sublet – Bulk Materials

Sublet Code 4	See the sublet reimbursement calculations below	Reimbursement for replacing the drained quantity of antifreeze/coolant (Bulk container reference 82 14 1 467 704, one gallon container. Do not use this part number for claim submission)

Sublet reimbursement calculation for claiming BMW antifreeze/coolant (1 gallon bulk container reference P/N 82 14 1 467 704) for approximately 2 liters (“quantity used,” 4 liters total at a 50/50 solution) is at the dealer net price for the plus your center’s handling.

Enter this material cost in sublet and itemize the amount on the repair order and in claim comment section.

And, as applicable:

Alternative Mobility Solution (AMS) for Vehicles Already Delivered

This Service Action repair qualifies for Alternative Mobility Solution (AMS) expense reimbursement, claim this item under the Defect Code noted above as follows:

- Sublet Code 2 - Itemize the AMS sublet amount on the repair order and in the claim comment section.

Please refer to SI B01 29 16 for additional information.

Posted: Thursday, November 30, 2017

ATTACHMENTS

View PDF attachment **B170817 Delivery Stop Legal**.

View PDF attachment **B17 08 17 Replacing the Coolant Return Line**.

Copyright ©2022 BMW of North America, Inc.